ADELE PLUS

Dušas durvju montāžas instrukcija

Инструкция по монтажу душевой двери

Shower door installation instructions

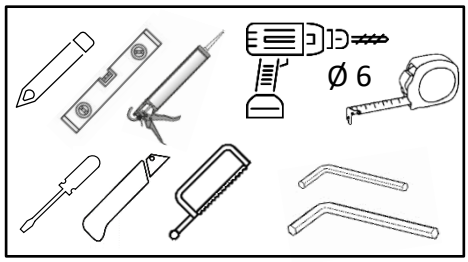

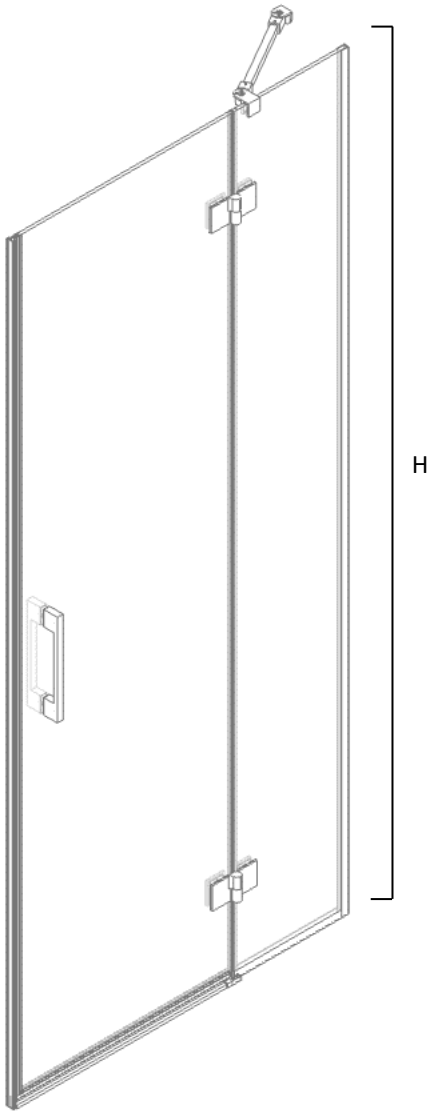

1.		MF-42/8-ER	1
2.		400211PS-013	1
3.		R1653308	1
4.		3,5x35 SK1SET; Ø 6	2
5.		PAL-01	1
6.		PAL-01B	1
7.		GC-2032	1
8.		MF-43MAGN	1
9.		SC-ALU8X9NEW	1
10.		SC-SL-UZL180R	1
11.		SU45CHKANT + SK2SET1	1
12.		NLO-ZD-2856	1
13.		M981R - 180CH / M981L - 180CH	2
14.		8 mm Safety Glass	1
15.		8 mm Safety Glass	1

ADELE PLUS	A + B (mm)	B (mm)	H (mm)
70ADE+	698-703	200	1988
80ADE+	798-803	200	1988
90ADE+	898-903	300	1988
100ADE+	998-1003	300	1988
110ADE+	1098-1103	400	1988
120ADE+	1198-1203	500	1988

LEFT

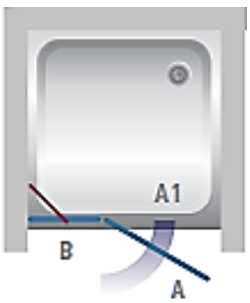

RIGHT

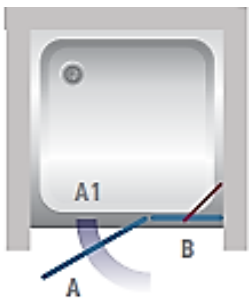

SIA Stikla Serviss, Toma iela 4, Rīga, LV-1003 Latvija, Tālr.: +371 67472933,
www.stikla-serviss.lv; e-pasts: info@stikla-serviss.lv

ADELE PLUS

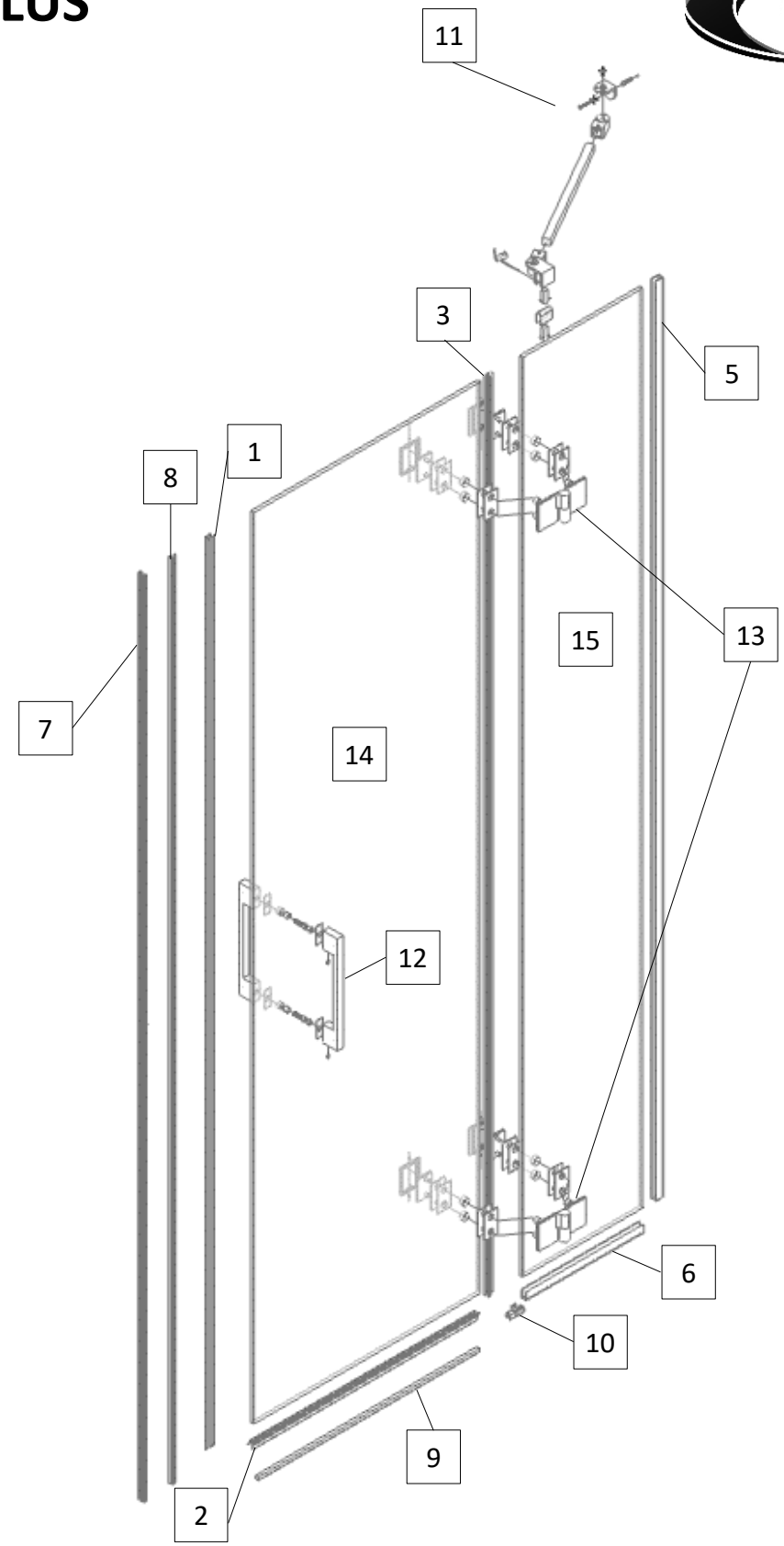

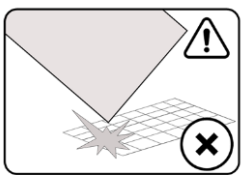

Uzmanību! Rūdīts stikls- rīkojieties uzmanīgi. Aizsargājiet stikla stūrus pret triecieniem.

Внимание! Закаленное стекло – будьте осторожны. Защищайте углы стекла от ударов.

Attention! Tempered glass - proceed with care. Protect the corners of the glass from impact.

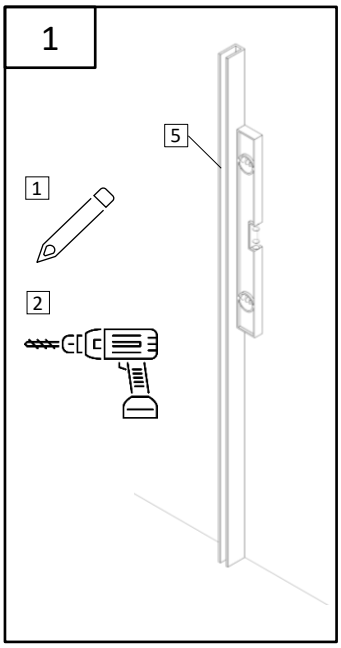
1
5
1
2

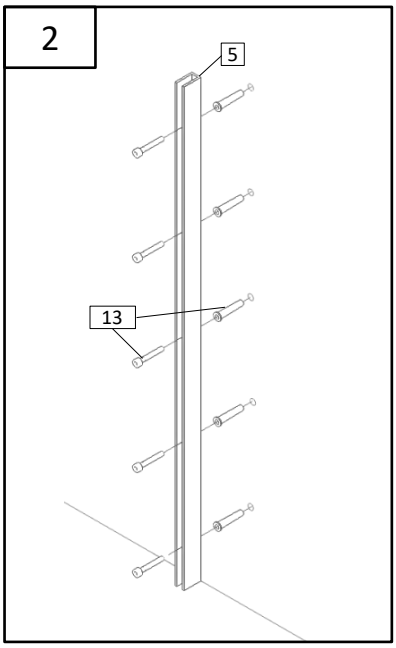
2
5
13

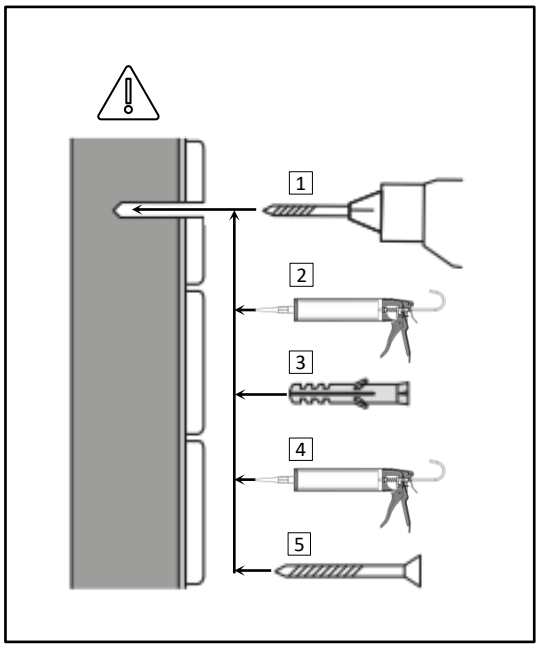
1
2
3
4
5

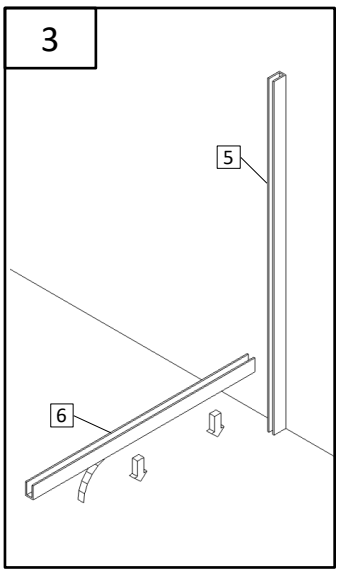
3
5
6

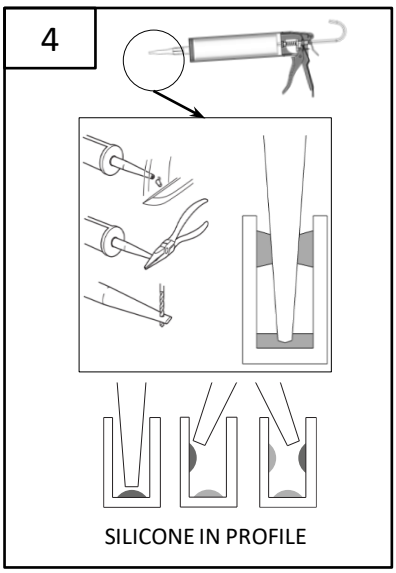
4
SILICONE IN PROFILE

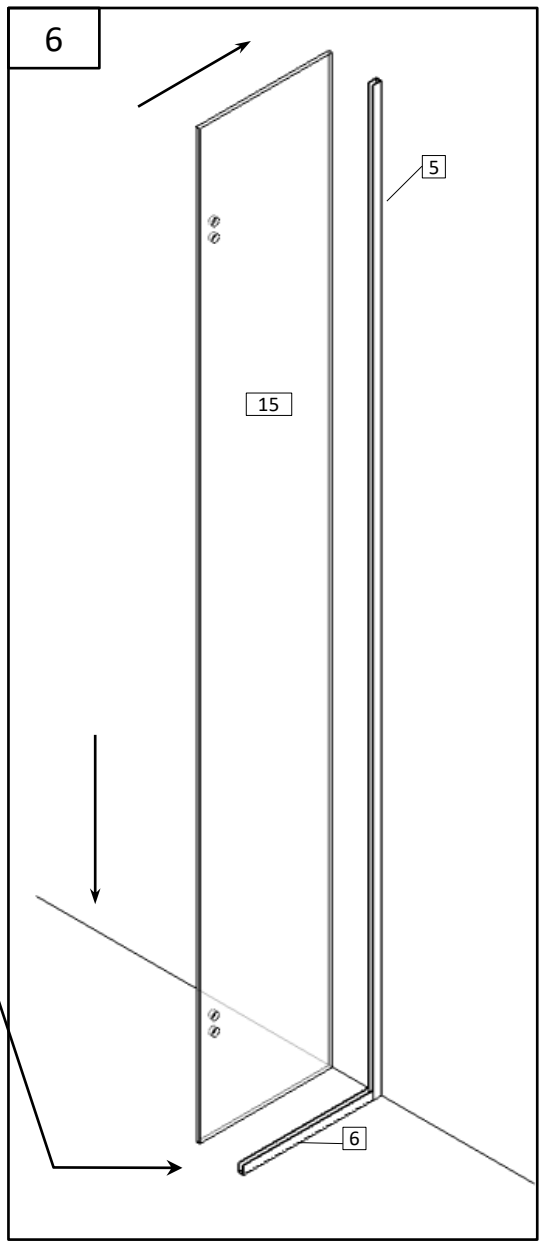
6
5
15
6

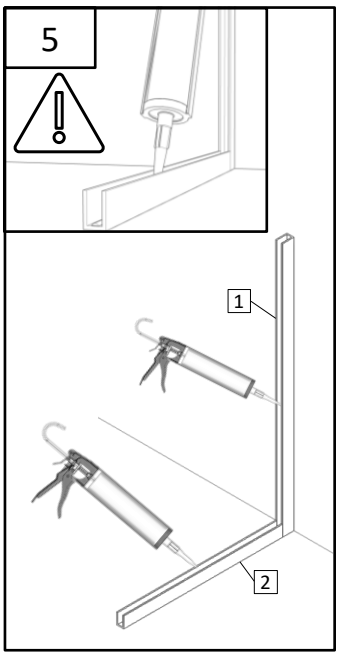
5
1
2

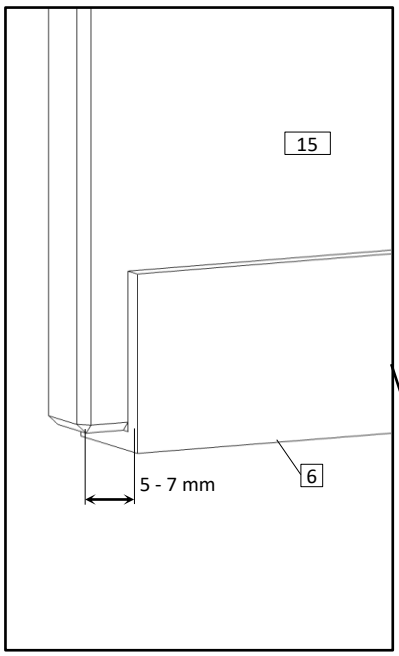
15
5 - 7 mm
6

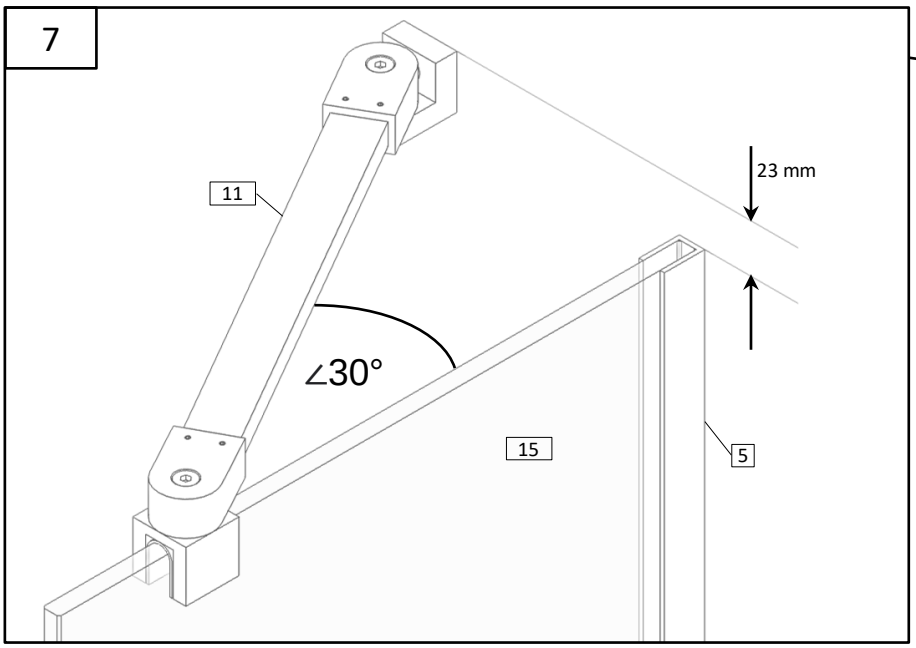
7
11
23 mm
∠30°
15
5

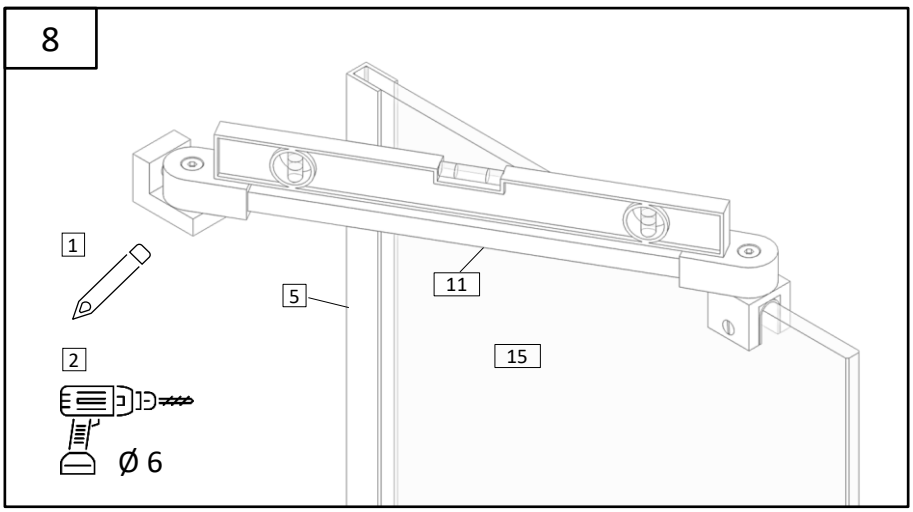
8
1
2
Ø 6
5
11
15

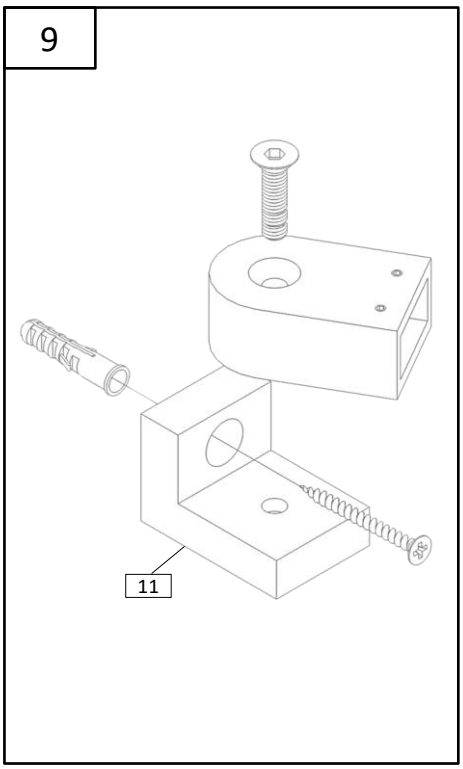
9
11

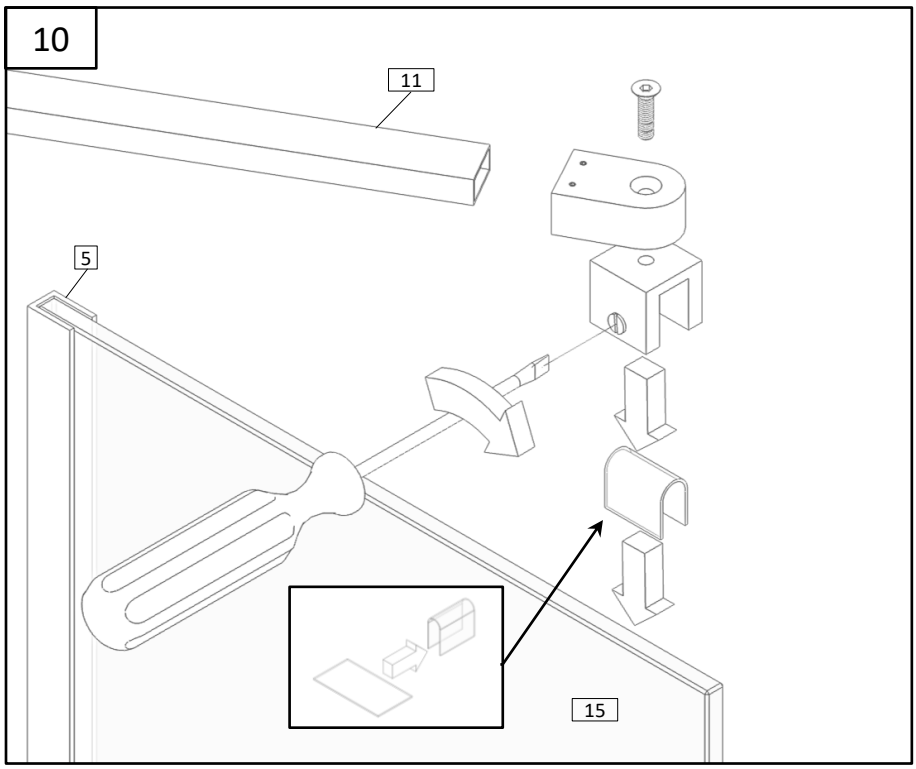
10
11
5
15

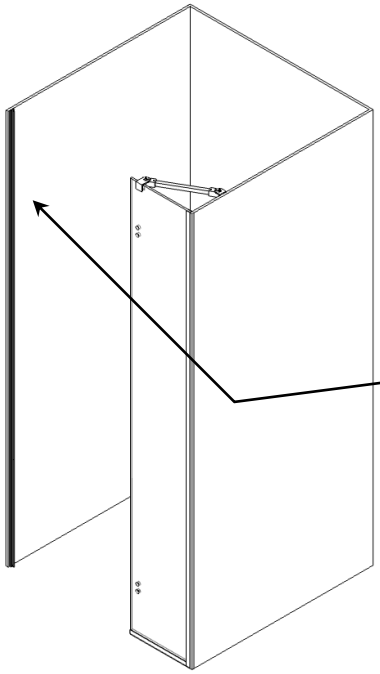

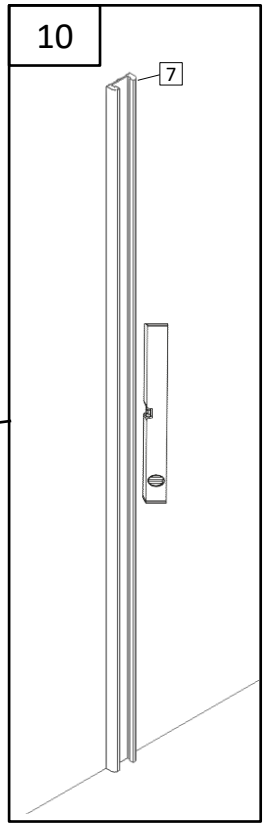
10
7

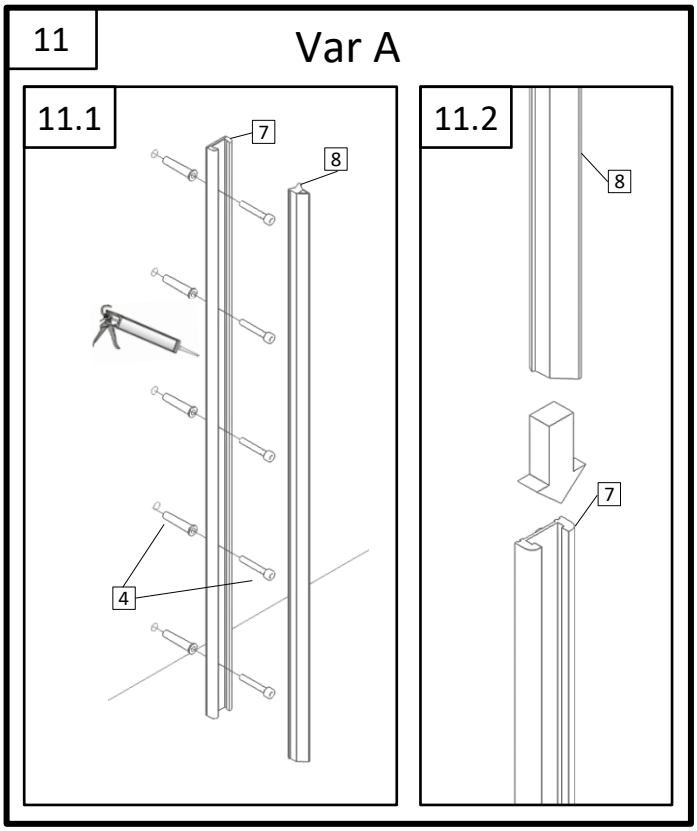
11
Var A
11.1
7
8
4
11.2
8
7

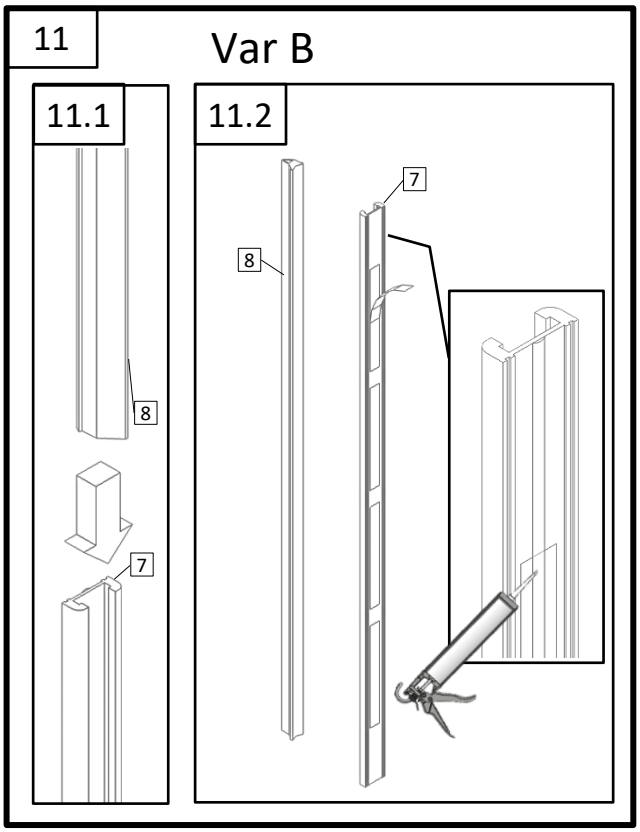
11
Var B
11.1
8
7
11.2
7
8

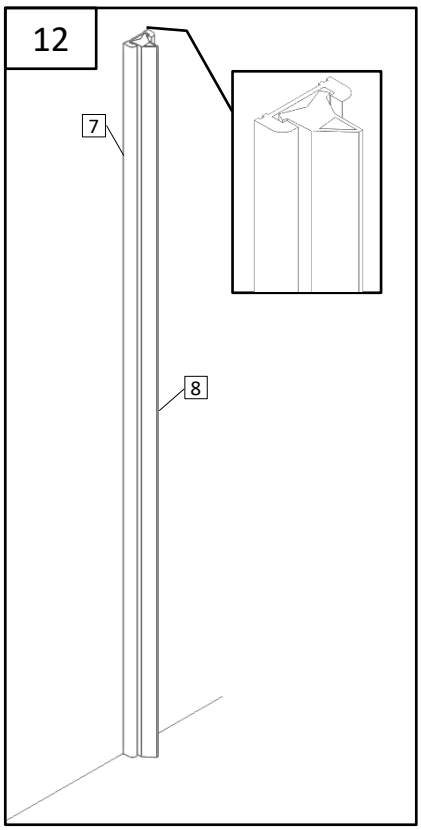
12
7
8

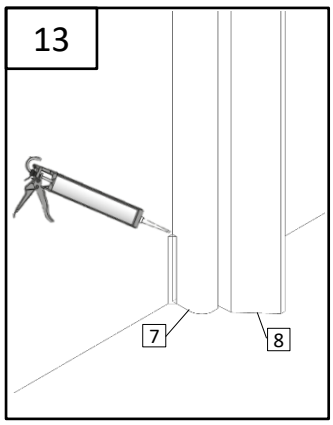
13
7
8

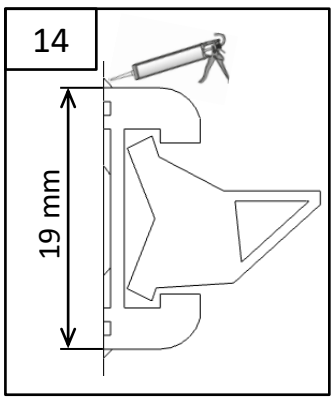
14
19 mm

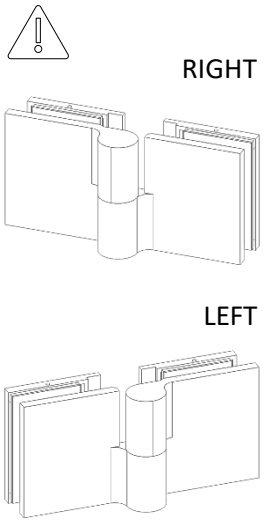
RIGHT
LEFT

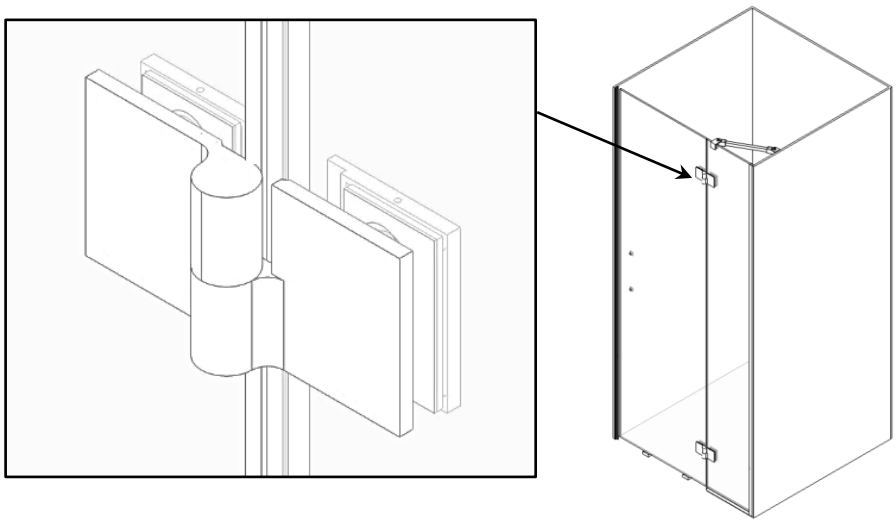

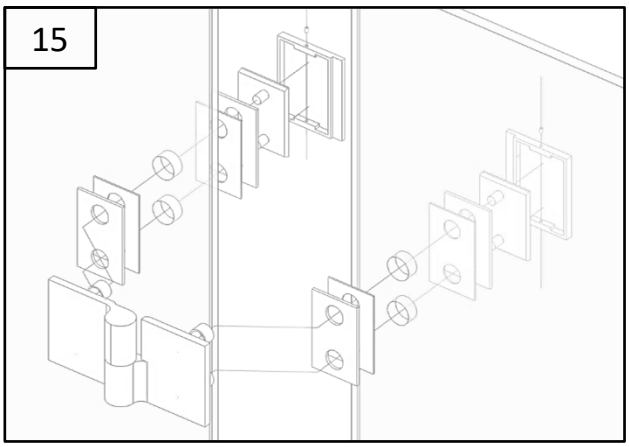
15

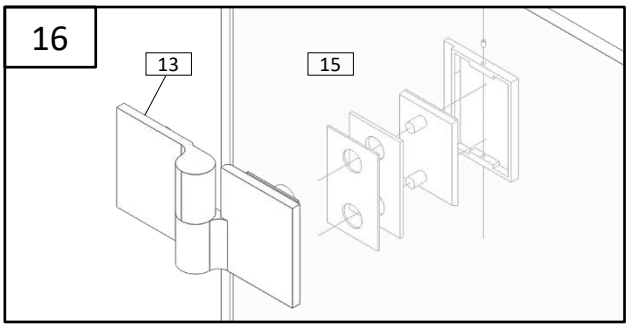
16
13
15

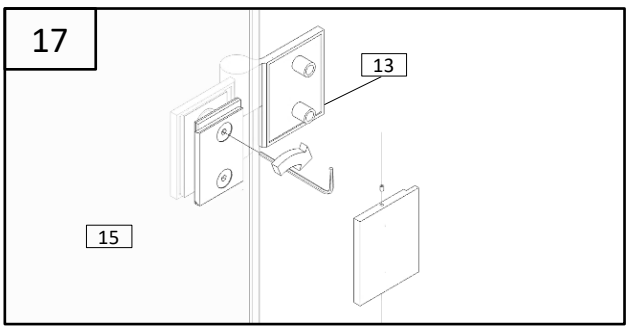
17
13
15

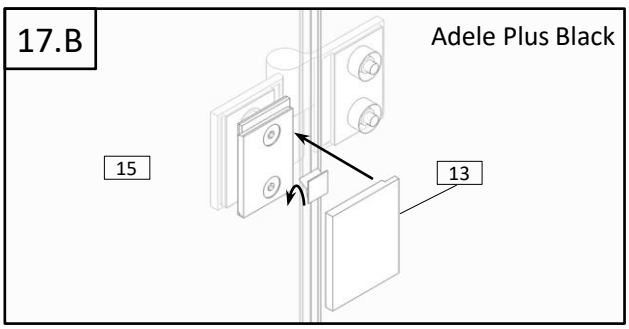
17.B
Adele Plus Black
15
13

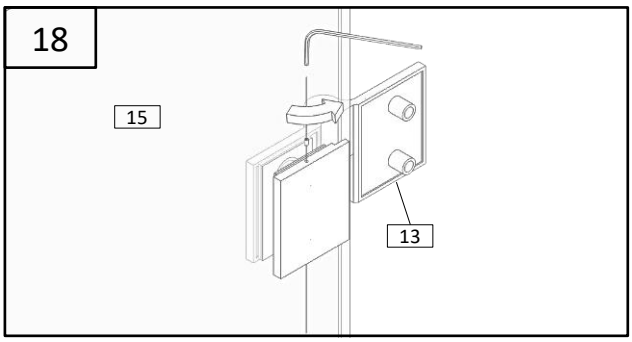
18
15
13

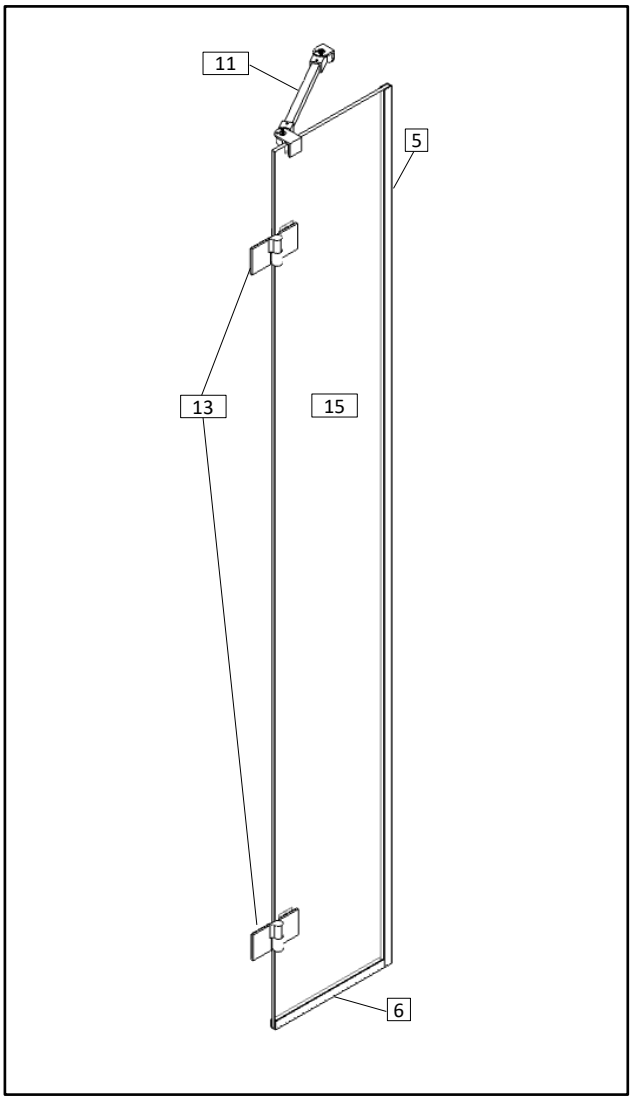
11
5
13
15
6

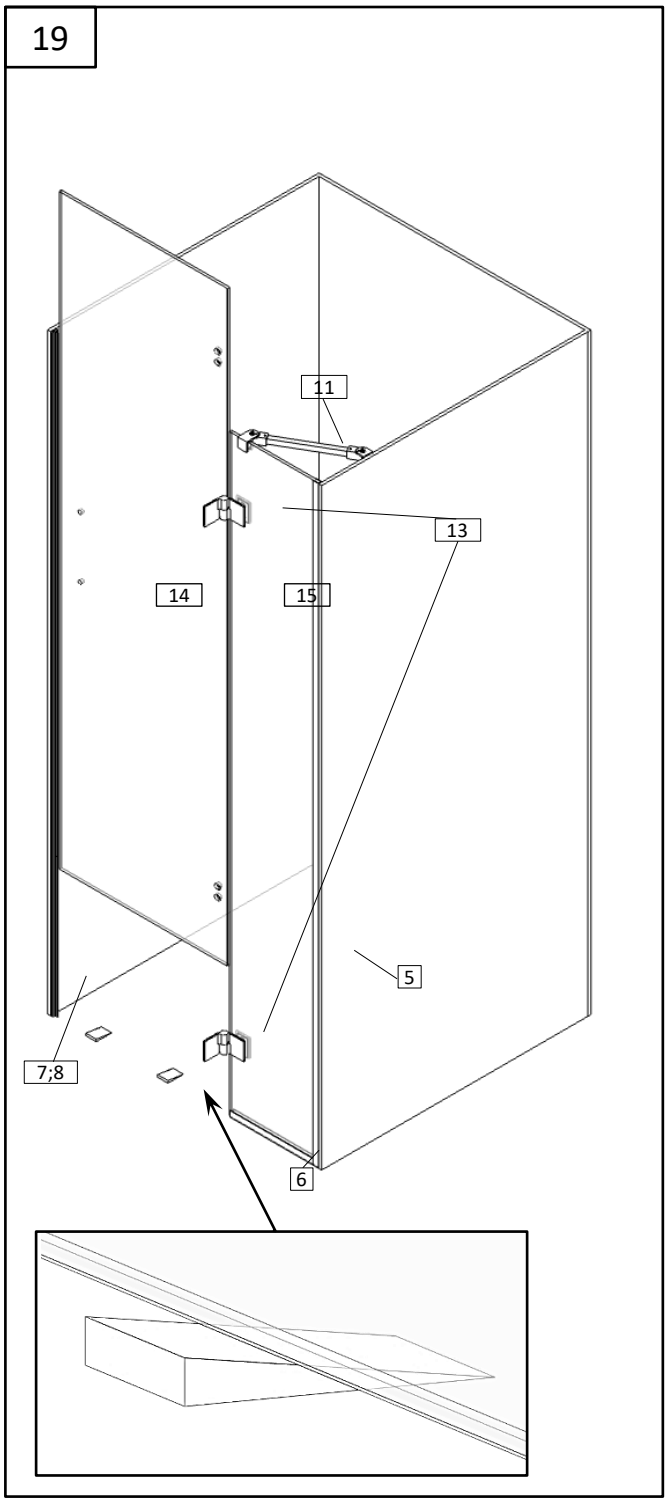
19
11
13
14
15
5
7;8
6

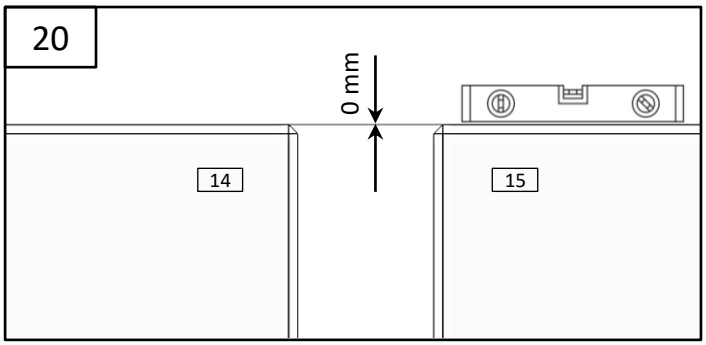
20
0 mm
14
15

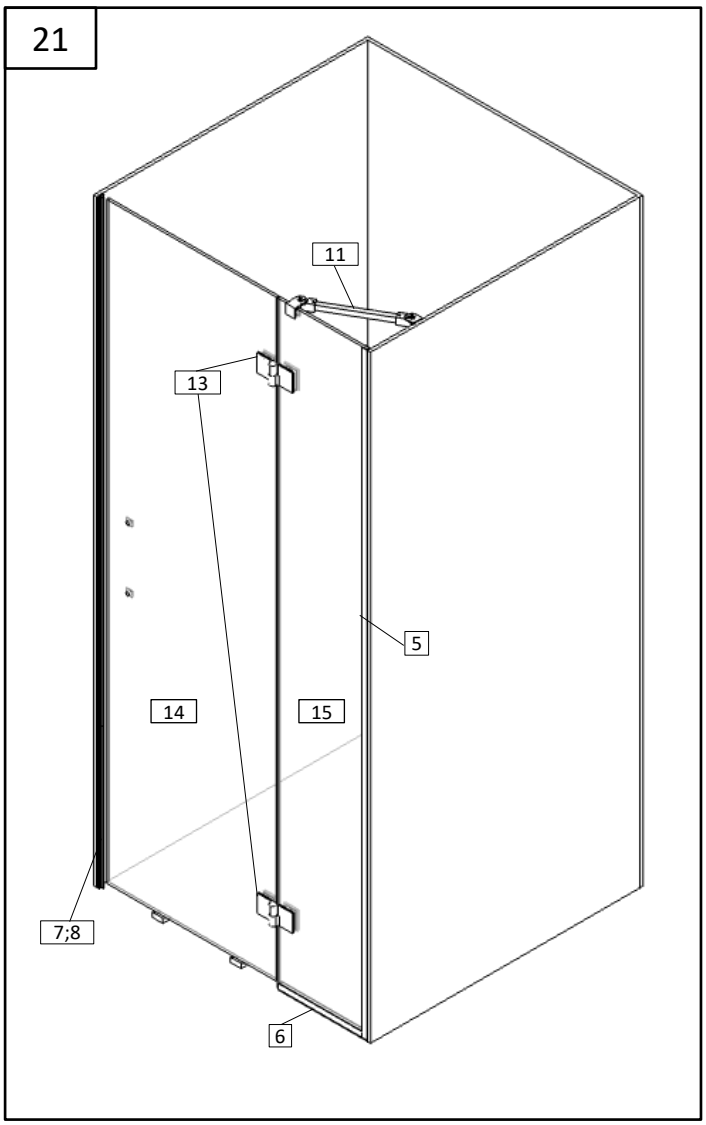
21
11
13
5
14
15
7;8
6

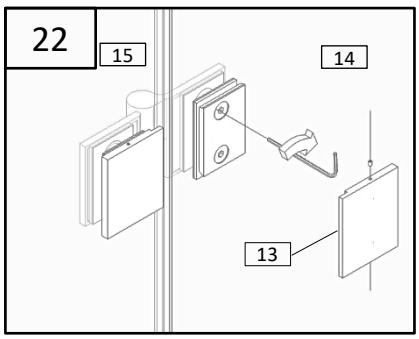
22
15
14
13

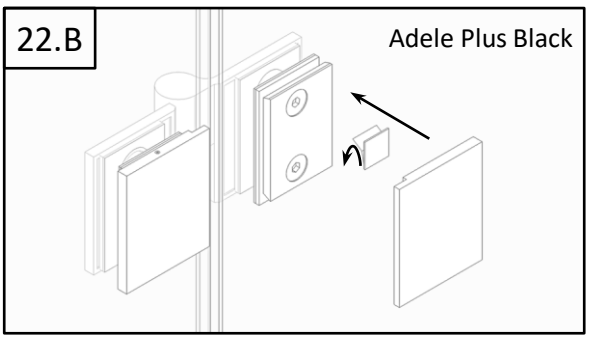
22.B
Adele Plus Black

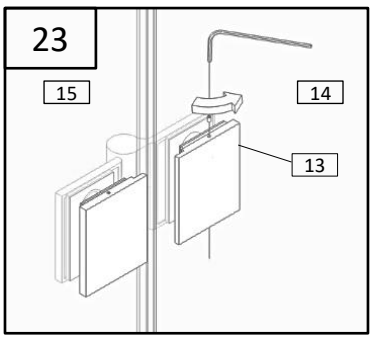
23
15
14
13

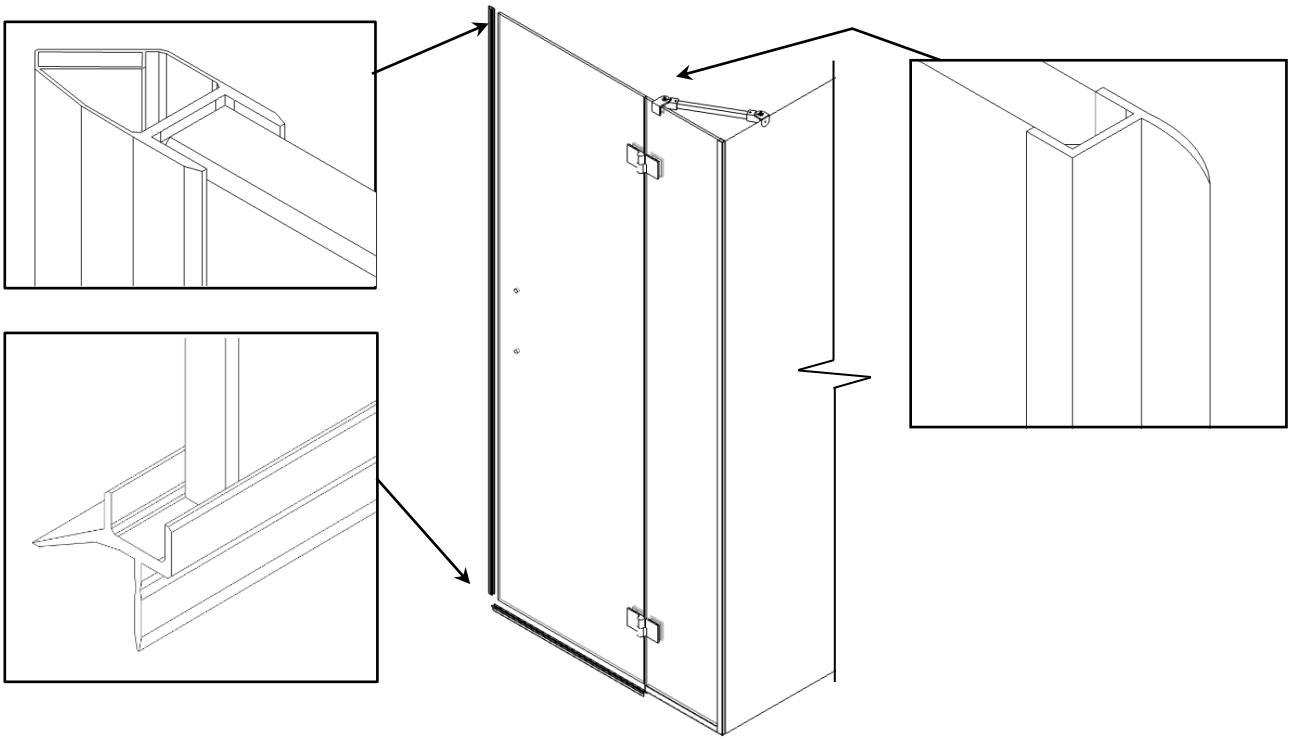

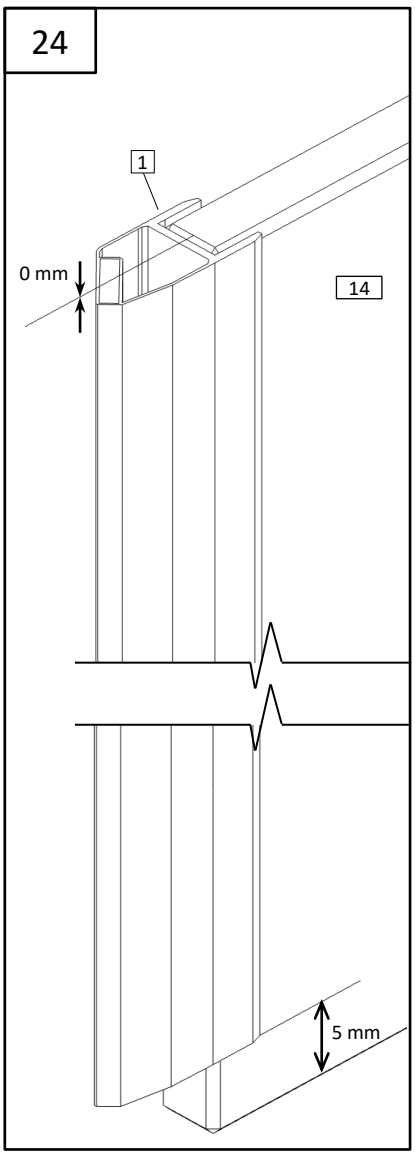
24
1
0 mm
14
5 mm

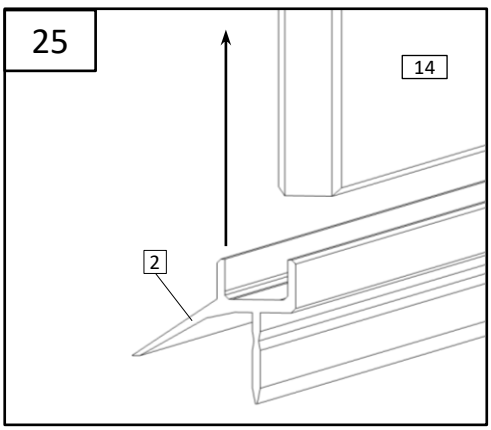
25
14
2

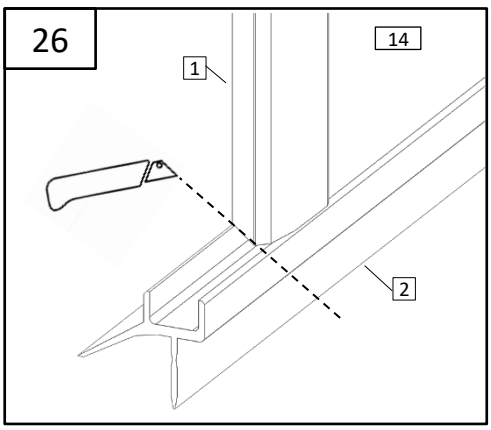
26
14
1
2

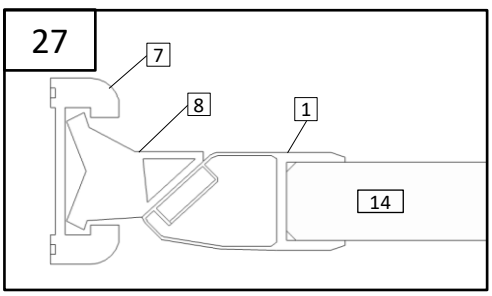
27
7
8
1
14

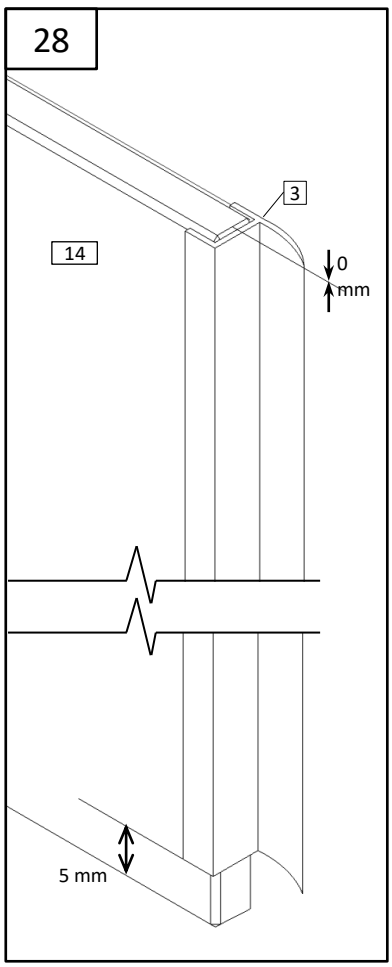
28
3
14
0 mm
5 mm

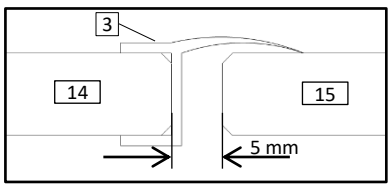
3
14
15
5 mm

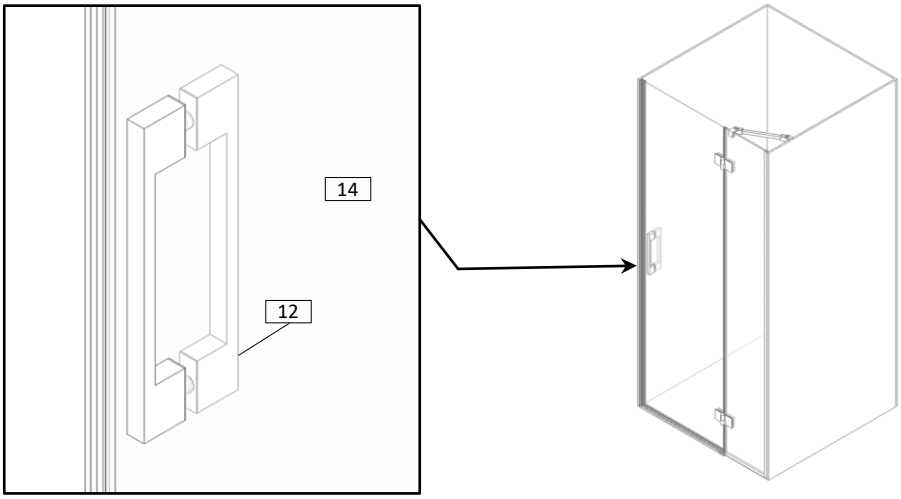
14
12

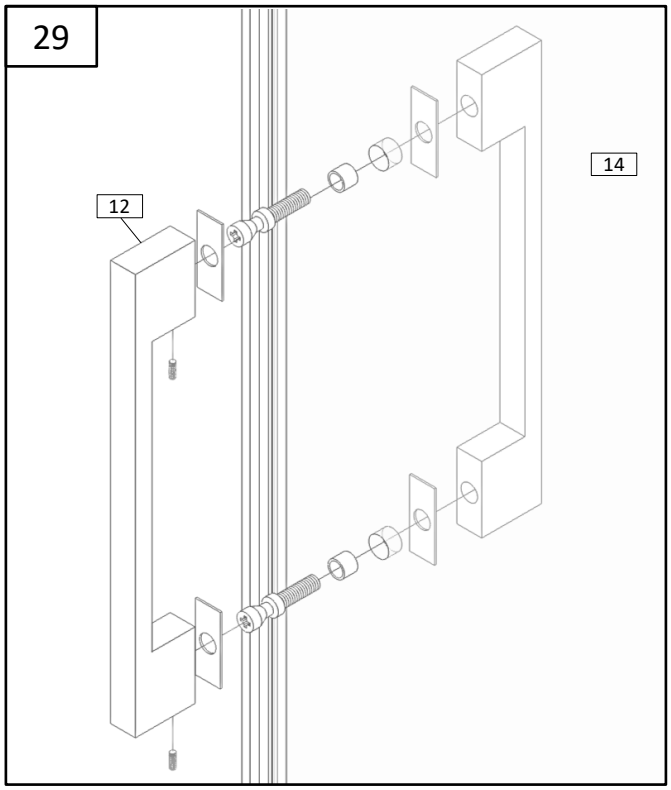
29
12
14

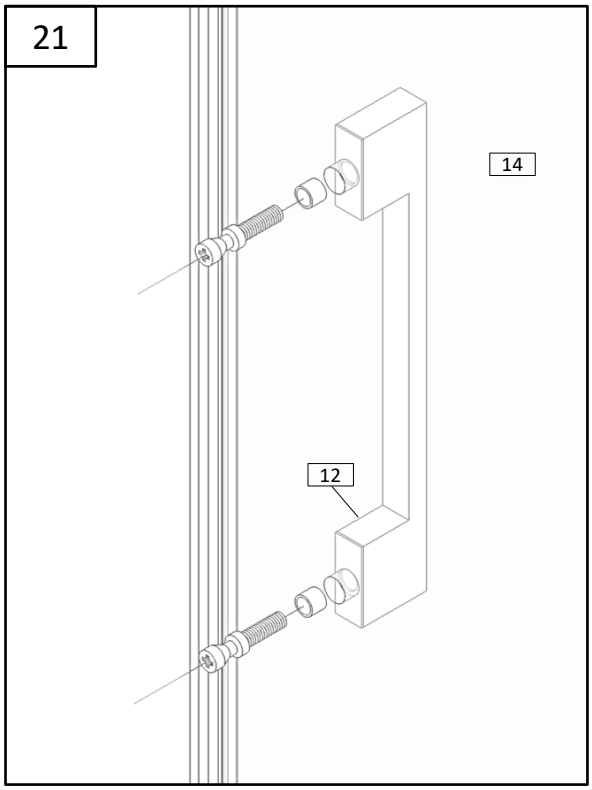
21
14
12

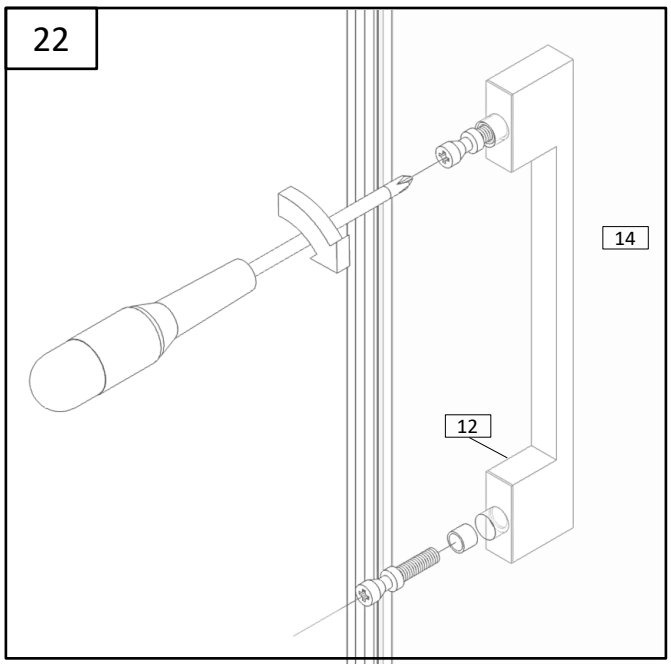
22
14
12

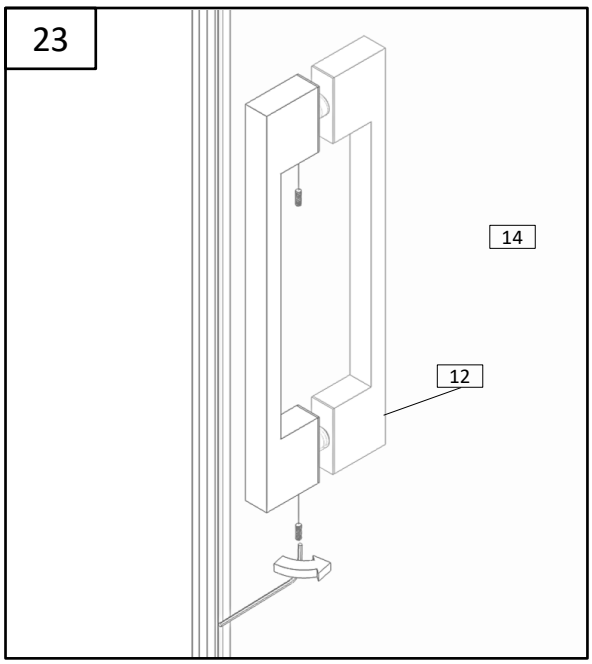
23
14
12

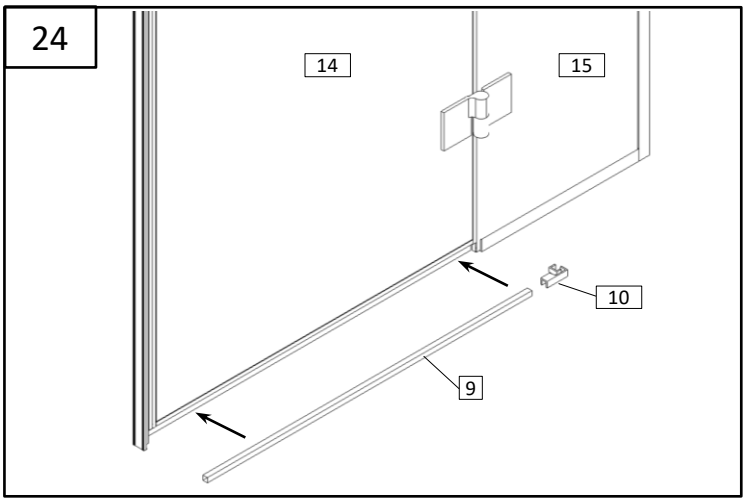
24
14
15
10
9

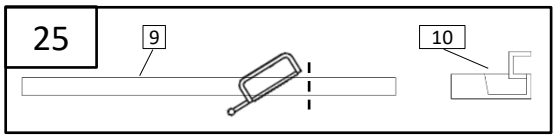
25
9
10

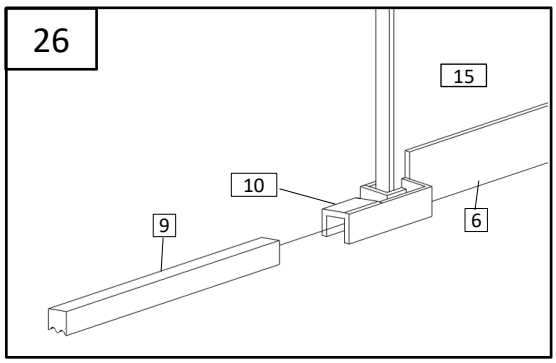
26
15
10
9
6

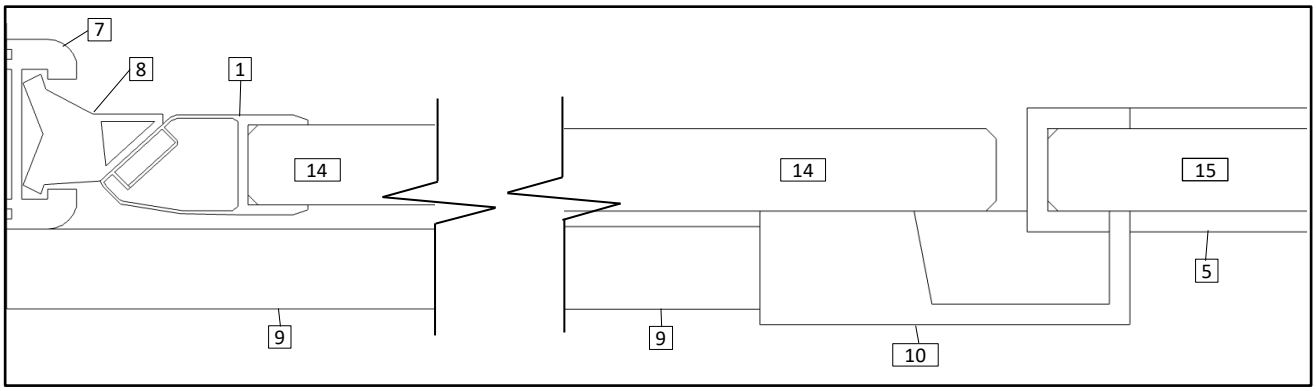
7
8
1
14
14
15
5
9
9
10

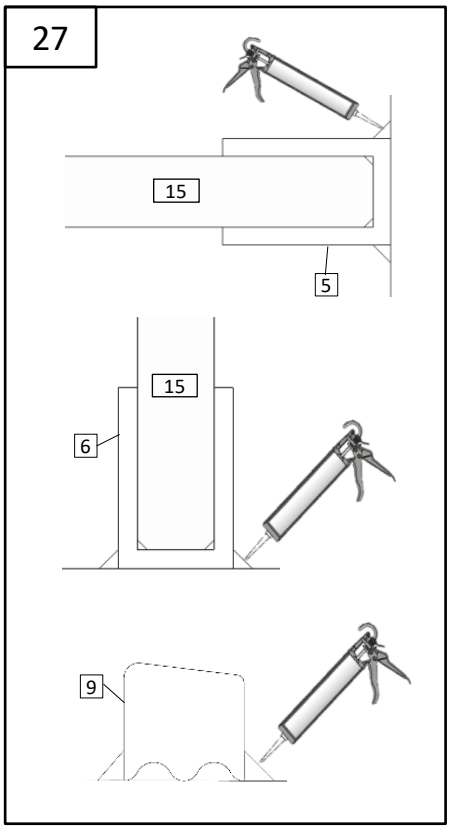
27
15
5
15
6
9

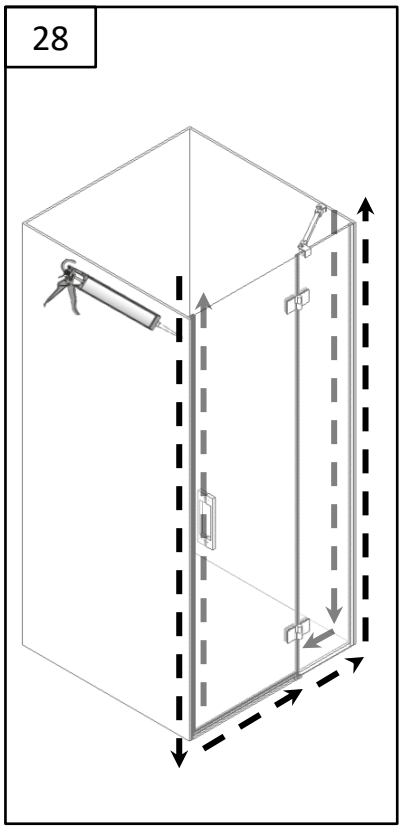
28

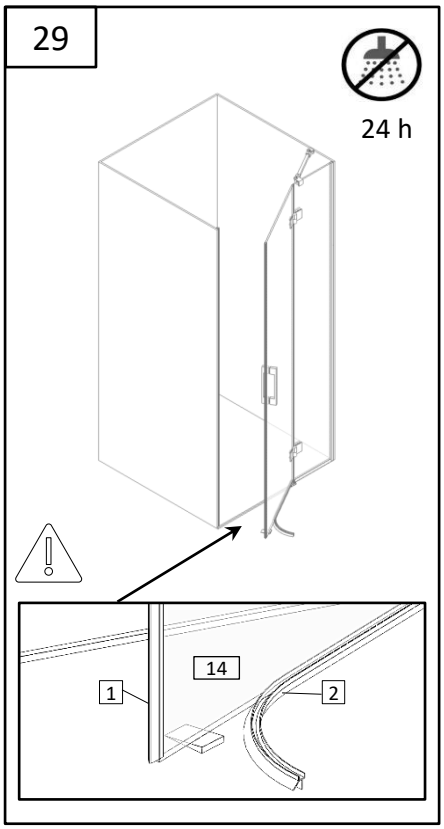
29
24 h
14
1
2